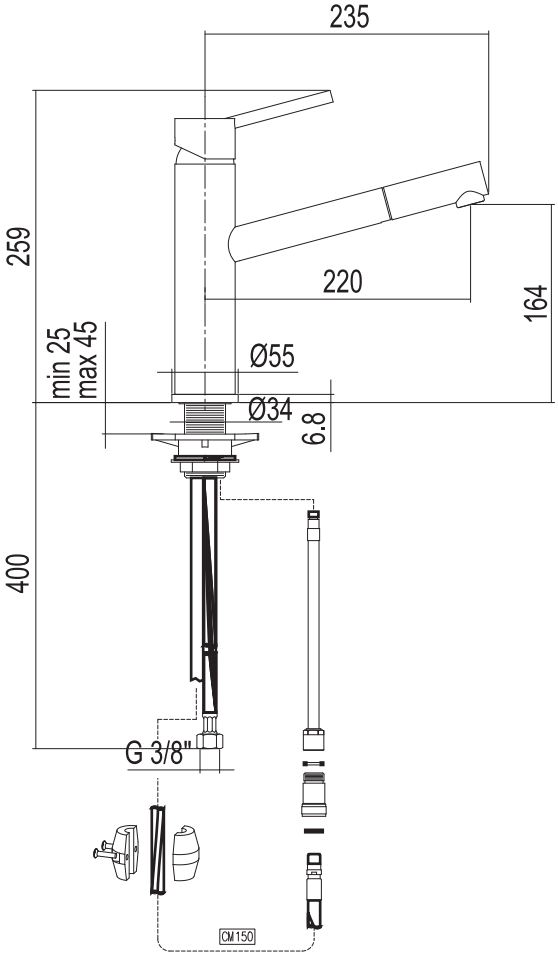
235
259
220
164
min 25
max 45
Ø55
Ø34
6.8
400
G 3/8"
CM150